COG16050-01

Graphic 160x50dots

Part number list

AMG160050A□□□-□-□

Feature

1.Built-in controller ST7525
2.Bulit-in voltage booster
3.+3.0V single power supply
4. I2C interface

Pin Assignment

Pin No.	Symbol	Description
1	ESD	ESD protection
2	VX0	LCD Driving voltage (+)
3	V0	LCD Driving voltage (-)
4	VDD	Power Supply Voltage
5	VSS	Power Supply Ground
6	CS	Chip select input pins
7	A0	Data /Command select
8	RST	Reset signal
9	SCL	Serial Clock Input
10	SDA	Serial deta input
11	ESD	ESD protection
12	NC	No connection

Mechanical Data

Item	Standard Value	Unit
Module Dimension	56.1 x 26.1	mm
Active Area	47.97 x 14.97	mm
Dot Pitch	0.30 x 0.30	mm
Dot Size	0.27 x 0.27	mm

Electrical Characteristics

Item	Symbol	Standard Value	Unit
		typ.	
Input Voltage	VDD	3.0	V
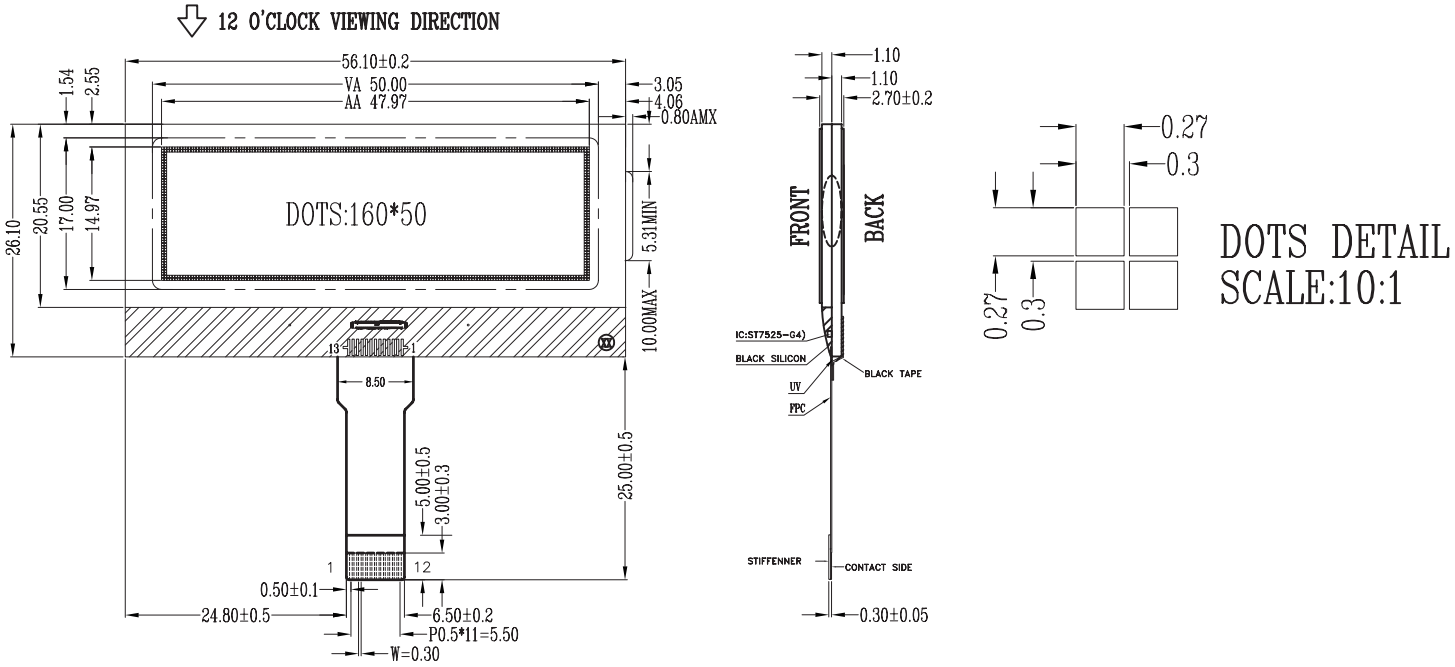
Mechanical Drawing