COB320240-18

Graphic 320x240dots

Part number list

SG320240H-□□□-□□-□□-□

Feature

1.Diagonal 5.7inch
2.Built-in controller RA8806
3.Bulit-in oscillation and negative voltage
4.+5V single power supply
5.8080 interface

Pin Assignment

Pin No.	Symbol	Description
1	V_{SS}	Power Supply Ground
2	V_{DD}	Power Supply Voltage
3	V_O	Contrast Adjustment Voltage
4	/RD	Read Signal
5	/WR	Write Signal
6	A0	Data Type Select
7~14	DB0~DB7	Data Bus Line
15	/CS	Chip Signal
16	/RES	Reset Signal
17	V_{LCD}	Power Supply Voltage For LCD
18	FG	For GND
19	NC	No Connection
20	NC	No Connection

Mechanical Data

Item	Standard Value	Unit
Module Dimension	156.0 x 120.2	mm
Active Area	115.17 x 86.37	mm
Dot Pitch	0.36 x 0.36	mm
Dot Size	0.33 x 0.33	mm

Electrical Characteristics

Item	Symbol	Standard Value	Unit
		typ.	
Input Voltage	VDD	5.0	V
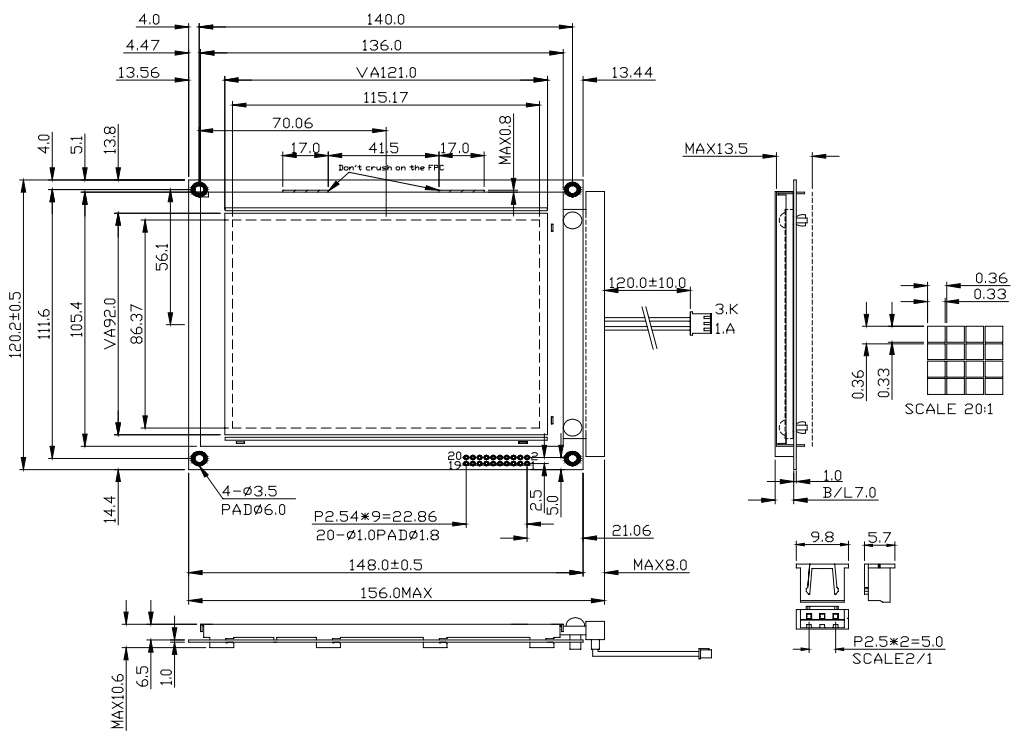
Mechanical Drawing