COB12232-01

Graphic 122x32dots

Part number list

WG12232I-□□□-□□#

Feature

1.Built-in controller SBN1661G or equivalent
2.Bulit-in oscillation
3.+5V single power supply
4. 6800 interface
5.FFC
6.White LED backlight not available

Pin Assignment

Pin No.	Symbol	Description
1	V_{LED}	Power supply for B/L -
2	V_{SS}	Ground
3	V_{DD}	Power supply for logic
4	V_O	Contrast Adjustment
5	A0	Data/ Instruction select signal
6	E1	Enable signal
7	E2	Enable signal
8	DB0	Data bus line
9	DB1	Data bus line
10	DB2	Data bus line
11	DB3	Data bus line
12	DB4	Data bus line
13	DB5	Data bus line
14	DB6	Data bus line
15	DB7	Data bus line
16	R/W	Read/Write select signal

Mechanical Data

Item	Standard Value	Unit
Module Dimension	59.0 x 29.3	mm
Active Area	45.72 x 11.97	mm
Mounting Hole	50.0	mm
Dot Pitch	0.375 x 0.375	mm
Dot Size	0.345 x 0.345	mm

Electrical Characteristics

Item	Symbol	Standard Value	Unit
		typ.	
Input Voltage	VDD	5.0	V
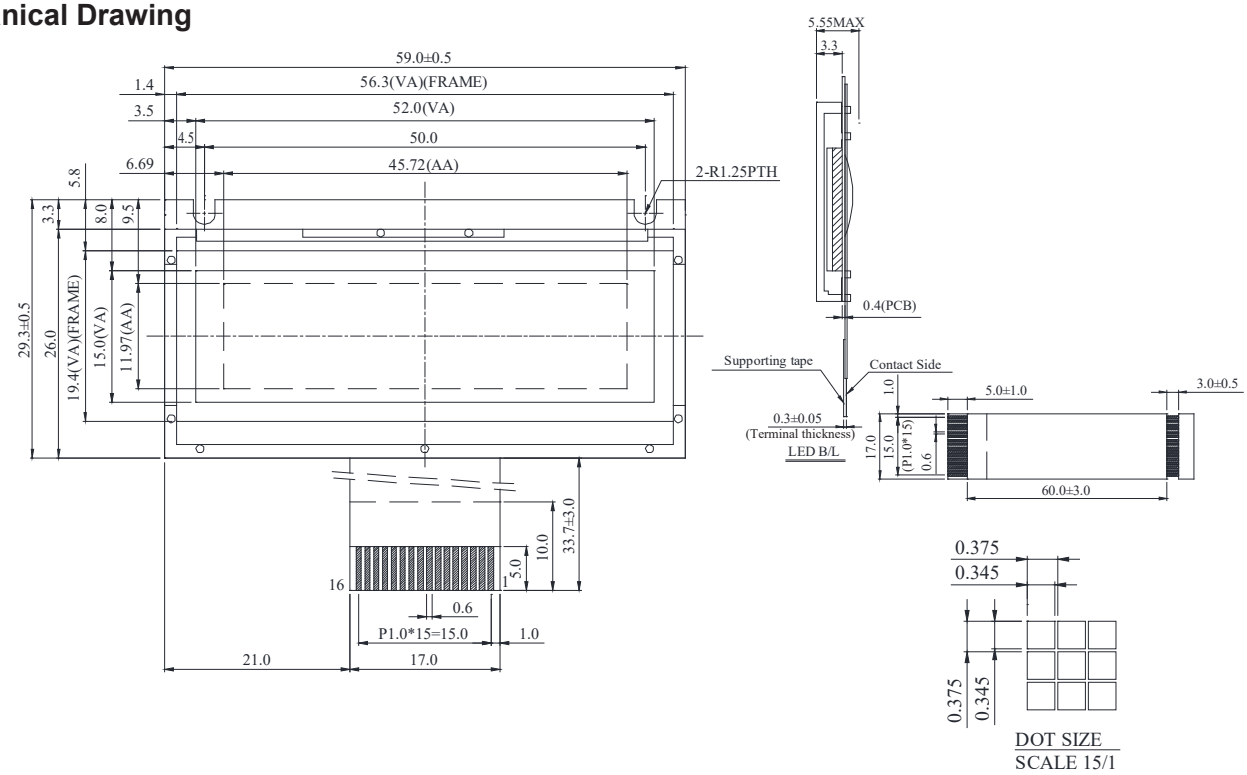
Mechanical Drawing