COB0802-03

Character 8x2

Part number list

SC0802D□□□-□□-□□-□

Feature

1.Bulit-in controller ST7066 or equivalent
2.+5V single power supply
3.(Option) +3V power supply

Pin Assignment

Pin No.	Symbol	Description
1	V_{SS}	Supply Ground
2	DB0	Data bit 0
3	K	LED Power
4	DB1	Data bit 1
5	V_{DD}	Supply Voltage
6	DB2	Data bit 2
7	V_O	Contrast Adjustment
8	DB3	Data bit 3
9	A	LED Power
10	DB4	Data bit 4
11	E	Enable signal
12	DB5	Data bit 5
13	R/W	Read/Write
14	DB6	Data bit 6
15	RS	Register Select
16	DB7	Data bit 7

Mechanical Data

Item	Standard Value	Unit
Module Dimension	48.0 x 42.0	mm
Viewing Area	38.0 x 16.0	mm
Dot Size	0.60 x 0.70	mm
Character Size	2.96 x 5.56	mm

Electrical Characteristics

Item	Symbol	Standard Value	Unit
		typ.	
Input Voltage	VDD	5.0	V
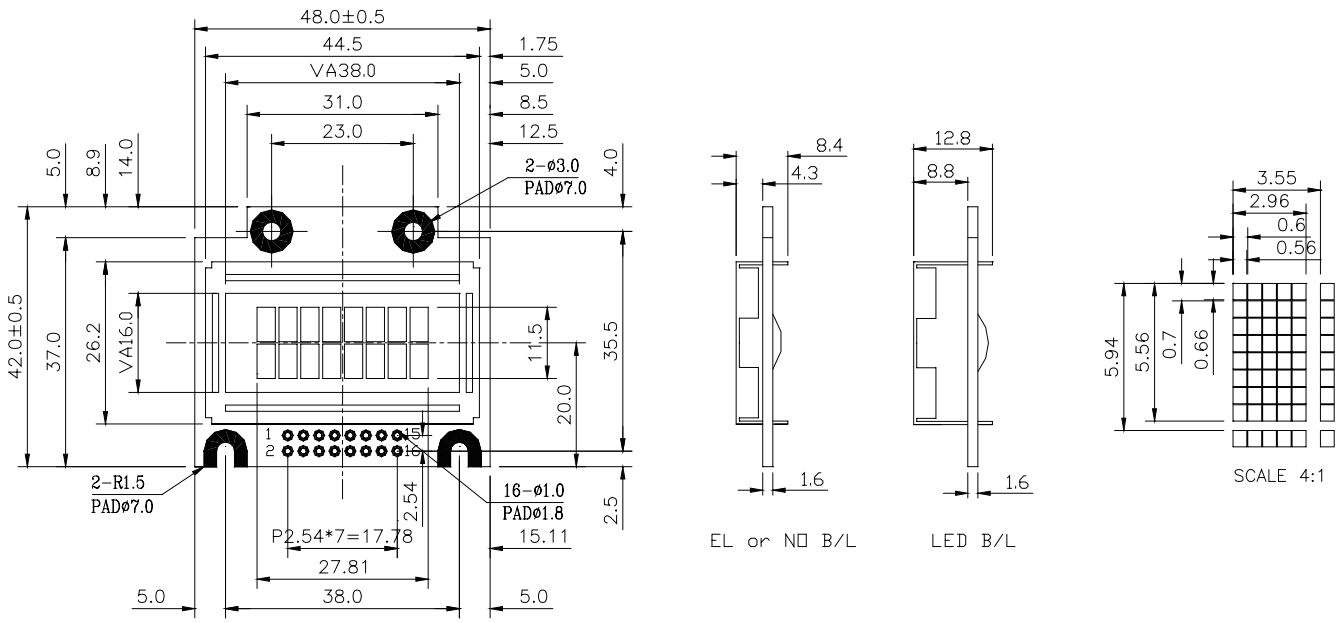
Mechanical Drawing